MADRAS PUBLIC LIBRARY
DEC 1955

JOURNAL

OF THE ELECTRICITY DEPARTMENT GOVERNMENT OF MADRAS

VOL. IX — OCTOBER—DECEMBER 1954 — No. 3

EDITOR

K. V. KARANTHA, M.A., M.I.E. . . . *Chief Electrical Inspector to Government.*

MEMBERS OF THE ADVISORY COMMITTEE

N. R. NARASIMHAMURTHI, B.SC., B.E. . . . *Chief Operation Engineer (North).*

M. B. KANDASWAMI, B.A., B.E., M.E. (Hons.), M.I.E. (Ind.),
Chief Operation Engineer (South).

A. R. NARAYANA RAO, B.E. (MECH.), M.I.E.E., M.I.E. (Ind.),
Superintending Engineer (Distribution), Madras Electricity System.

P. V. A. NARAYANAMURTHY, B.SC.,
Superintending Engineer (Generation), Madras Electricity System.

P. A. KRISHNAN, B.A., B.SC. (Eng.) *Superintending Engineer, Technical (Electrical).*

The Department is not responsible for any statement made or opinion expressed in this Journal.

CONTENTS

PAGE

EARTHING OF SINGLE CORE POWER CABLE SHEATHS 85
Sri V. P. APPADURAI, B.A., M.I.E. (Ind.), and Sri A. SUBRAMANIAM, B.E.

NETWORK ANALYSER STUDY OF THE MADRAS GRID 91
Sri G. S. RAMA IYER, B.Sc., M.I.E., Sri. K. R. RADHAKRISHNAN, B.E., A.M.I.E., and Sri T. V. RAMADOSS, B.E.

PROGRESS DURING QUARTER ENDING 30TH JUNE 1954 117

PAGE

TECHNICAL PRESS—

New Battery Converts Sunlight into Electricity 122

Commercial Atomic Power in 5 to 10 Years 123

Care and Use of Rope and Blocks 124

TVA Installing Largest Pump-Turbine 125

SOCIAL AND PERSONAL 125

NOTES FOR THE GUIDANCE OF AUTHORS OF ARTICLES CONTRIBUTED FOR THE JOURNAL

Articles or papers should be authoritative and when describing works, the information should be accurate. Normally, articles or papers, already published in other journals are not accepted. In any case, the fact of the articles or any part thereof having been published previously must be indicated clearly in the forwarding letter. All manuscripts should be typewritten (double spacing) on one side of the paper only, with a margin of at least two inches. Manuscripts must bear the signature of the author (or the signatures of the authors). The title of the paper should not be long. If necessary, use a main title and a sub-title. No abbreviation should be used except those of a universal character. Numbers given to equations and formulæ in an article or paper should be assigned in order of occurrence in the paper. Symbols should be in accordance with the standard notations, unless there is specific reason for the contrary. The meaning of each symbol should be explained where first used and in case many symbols are used, a list should be provided in addition, in the beginning. Detailed references should be given to quotations. If numerous, these can be collected at the end, otherwise these should be placed as footnotes. References should be indicated by numbers, e.g., (4), (5), etc. Explanations given in footnotes should be indicated by signs, e.g., *, †, and not by numbers.

The authors of papers and articles are requested to scrutinize carefully the typed or cyclostyled copies before forwarding them. Equations and formulæ are best inserted in hand. Two sets of drawings should accompany an article. One set should be mere line-work without any lettering and the other complete with lettering, the former preferably on tracing cloth. Colour wash or line and pencil shades cannot be reproduced in line blocks. They should be replaced by hatching and colour lines by dashed chain or thicker black lines. The size of drawings or line blocks should generally be double the size to be reproduced in print.

It is desirable that the use of the first person should be avoided. When a specific statement is to be made, it should be written : " The author submits . . . . ", " The author holds the opinion . . . . . . ", etc. It is desirable that articles or papers should be sectionalized by giving suitable ' sectional headings '. Avoid long and involved sentences; short sentences are more effective and less likely to be misinterpreted. Do not begin a new sentence with a numeral, write the number in full as word. Place zero before the decimal point when the figure represents something less than unity ; thus :—0·75. Place a comma to mark the thousands in number of four figures and more; thus: 2,127,356, and, in the case of Rs. thus : 27,26,127. Do not write in the text of the article 8′6″ by 4′3″ but as 8 feet 6 inches by 4 feet 3 inches or as 8·5 feet by 4·25 feet. For numbers under 10—write out in full, if not followed by an abbreviation; thus, write nine days, but 9 lb., not nine lb. For numbers over ten use numerals ; thus 50 days.

MADRAS : PRINTED BY THE SUPERINTENDENT, GOVERNMENT PRESS.

DEC 1955

Earthing of Single Core Power Cable Sheaths

By V. P. APPADURAI, B.A., M.I.E. (Ind.)
Chief Engineer for Electricity
and
A. SUBRAMANIAM, B.E.,
Assistant Engineer (Electrical)

IT IS common practice to use three single conductor, paper or cambric insulated, lead sheathed cables for connecting the generators with their step up transformers in power stations. Voltages are induced along the sheaths of these power cables due to the mutual inductance of conductor, and sheath and therefore, considerations of safety make it necessary to ground the sheaths. If any sheath is grounded at more than one point sheath, currents will flow, which will heat up the cable. With three-core cables, such working conditions are avoided as the instantaneous sum of all currents in the three phases is zero.

Existing Departmental Practice.—There is no uniform practice adopted by the Department at present in regard to the earthing of sheaths of single core cables in power stations. The sheaths of the cables at some stations are earthed at both generator and transformer ends while at others earthing has been done at one end only.

Voltages induced in sheaths.—The voltage to neutral induced in the sheath of a single core cable due to normal load currents or fault currents on account of mutual induction is given by the formula,

$$Es = \sqrt{}M.I.$$

Where Es is the voltage induced in the sheath, M is the mutual inductance between the conductor and the sheath and I is the load current or fault current.

Also the mutual inductance

$$M = 1{\cdot}405 \times 10^{-4} \text{ Log } 10 \frac{D}{r} \text{ henries}$$

per 1,000 t.fee

where D is the spacing between the cables and r is the mean radius of the cable sheath.

It would be seen that the sheath voltage induced, varies logarithmically with the ratio of cable spacing to sheath radius and directly with the cable length and with the magnitude of the conductor current.

It would appear that where long lengths of cables and heavy currents are involved, the induced voltage may be considerable. The practice of the British Electricity Authority is to limit the sheath to ground voltage to within 10 to 15 volts. The Bureau of Reclamation (U.S.A.)

limits this to 12 volts. The Tennessee Valley Authority practice is to limit the induced voltage to 100 volts under fault condition. If this voltage is exceeded,

(i) damage may occur under fault conditions due to arcing between sheaths,

(ii) corrosion of the cable sheath may be accentuated due to electrolytic effect, and

(iii) there may be danger of shock to the operating personnel under fault conditions.

Sheath current and loss.—If the cable sheath is grounded at both ends, the induced voltage gives rise to sheath currents which heat up the cable. The sheath losses are calculated as shown below :—

If e is the inner radius of lead sheath in inches, f is the outer radius of lead sheath in inches, D, is the distance between conductors in inches,

Ls the inductance of the sheath of each cable in Henrys per 1,000 feet is equal to $\left(\frac{1\cdot4}{10^4}\right) \log \frac{D}{f}$ and R_0 the resistance of the sheath of each cable in ohms per 1,000 feet is equal to $\frac{0\cdot036}{f^2-e^2}$ at 40°c.

The sheath current $Is = \frac{Es.}{\sqrt{Rs^2 + (wLs)^2}}$

$= \frac{Es}{Rs}$ as wLs is usually negligibly small.

The sheath loss $Ws. = Is^2 \, Rs$

$= \frac{Es^2}{Rs}$ watts.

The sheath currents and consequently the losses increase rapidly with spacing and with conductor section. For large cables, the sheath current may be a considerable fraction of the load current while the sheath losses may be more or less equal to the load losses. Sheath currents may, therefore, reduce appreciably the capacity of the cables in many installations, so that it is necessary to eliminate the sheath currents altogether where possible or to limit them to safe values.

Sheath currents and losses may be eliminated altogether by grounding at one end only when the induced voltage does not exceed 10 to 15 volts. Where this voltage is exceeded, the cable sheath may be sectionalized and insulated at one or more intermediate points by cutting and removing the sheath to a width of about half an inch and insulating ; each length, being earthed at a single point and cross bonded to neutralize induced voltages.

In all our stations the lengths of cables and load currents are such that the voltage induced will be less than 12 volts and dividing the cables into sections is not found necessary.

Practices in other countries.—The practice regarding cable sheath grounding in other countries is described below :—

(*a*) *British Electricity Authority.*—(i) The British Electricity Authority lay the cables in close triangular formation, the sheaths being bonded together and earthed at both ends. In long runs the sheaths are earthed at intermediate points. By this means induced voltages in the sheath are reduced.

to 10 to 15 volts but sheath currents are set up which increase the heating. The sheath losses are calculated for each installation to ensure that they are not excessive.

(ii) In large section cables which diverge from the close triangular formation for connection to switchgear, transformers, overhead lines, etc., the sheath currents are prevented by means of insulating glands. The insulating glands may spark over at high transient voltages produced by switching or fault conditions or cause burning of the sheaths. It has, therefore, been found necessary sometimes to earth the cable glands.

(iii) The sheath losses are reduced by installing auxiliary copper conductors in close proximity of the cable to provide a low resistance secondary circuit.

(*b*) *Shawinigan Water and Power Company, Canada.*—The lead sheaths of single core cables are grounded at one point only, i.e., at the middle, the sheaths being insulated from the supports at all other points, including the sealing ends at the generator and transformer ends.

(*c*) *Bureau of Reclamation* (*U.S.A.*).—(i) For short runs, single core lead sheathed cables are bonded together and grounded at one end only, since the sheath voltage to ground would be considerably less than the specified minimum of 12 volts. With this practice of bonding and grounding, sheath currents and losses are eliminated. The cable sheaths are grounded at the generator end.

(ii) For long runs, single core cable sheaths are solidly bonded and grounded at intervals. With this method, the induced voltages, cause circulating currents, in the sheaths. To reduce sheath losses various methods of cross bonding which neutralize the sheath voltages are used as shown in Fig. 1.

In a simple method of cross bonding shown in (D) of Fig. 1 the cable sheaths are insulated at one or more intermediate points with insulating sleeves and transposed before being bonded solidly so that the voltages of the three sheath circuits between solidly bonded points trace the three sides of a triangle, starting at ground potential and returning to the same potential. With equilateral spacing of the cable, the voltage triangle will close and sheath losses will be eliminated.

If the cable spacing is not equilateral the voltage triangle will not close. However, the residual voltage will be small and the resulting sheath losses will not be more than 1 or 2 per cent of those for solidly bonded sheaths.

(*d*) *Tennessee Valley Authority.*—The sheath of each single conductor cable is solidly connected to ground at one point generally at the generator end. If the induced sheath voltage under fault conditions exceeds 100 volts at the ungrounded end, an insulating point is installed in the sheath and each section of the sheath grounded.

(*e*) *Hydro Electric Power Commission, Ontario.*—The practice of the Ontario Hydro Commission is also to earth cable sheaths at the source end only.

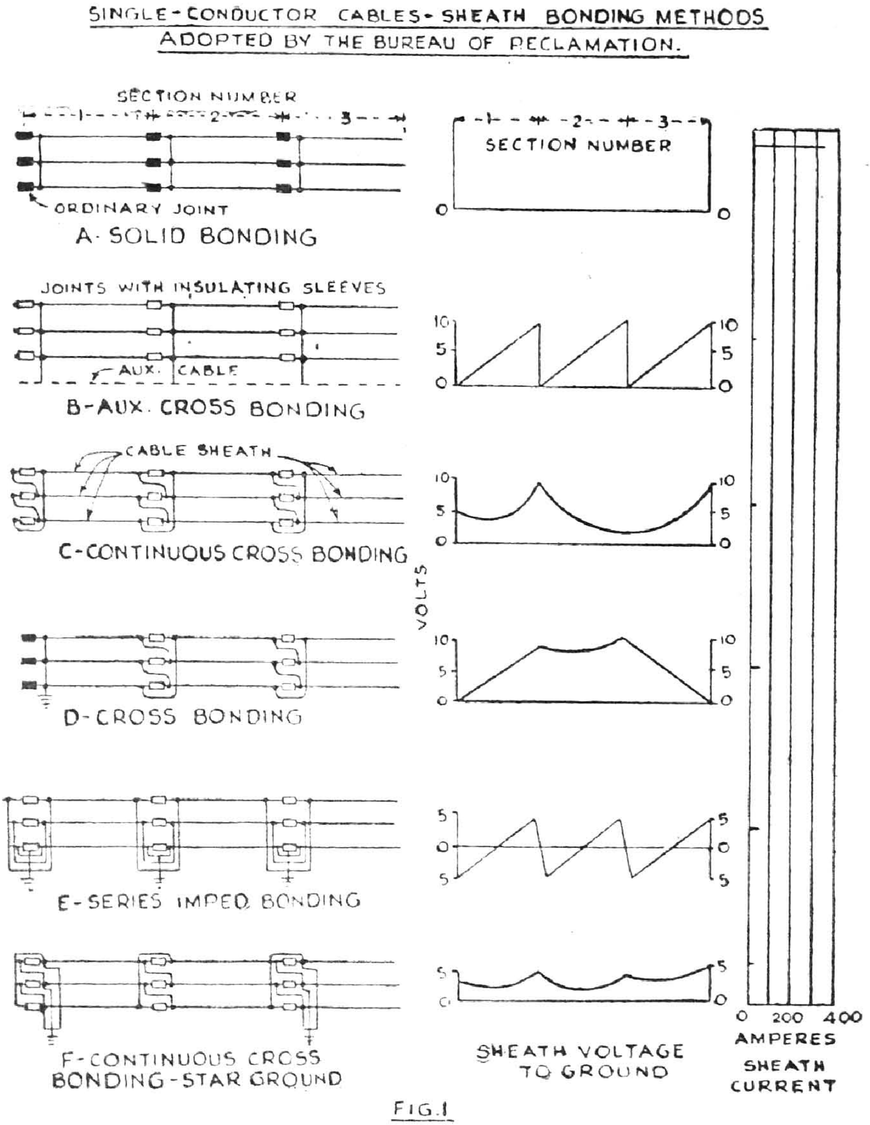

Fig. 1. Bonding Cable Sheaths.

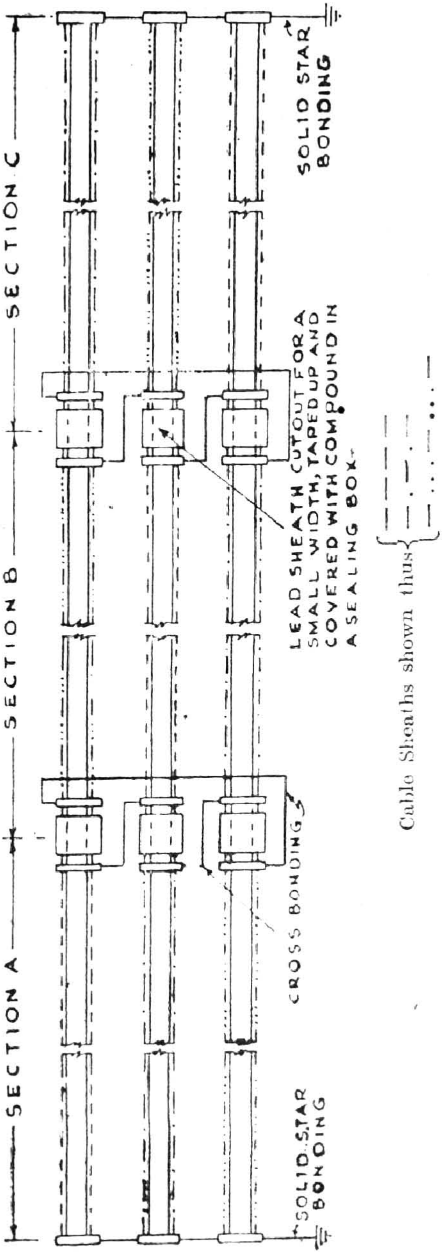

Fig. 2. Cross Bonding of Cable Sheaths.

Approximate calculations have been made for the induced sheath voltages and sheath losses in the main power cables at all the power stations in our department. The table below gives (*a*) the induced voltage if the cable sheaths are grounded only at one end and (*b*) sheath losses if the cable sheaths are grounded at the generator and the transformer ends.

Power station.	*Induced sheath voltage at full load if earthed at one end only.*	*Sheath loss at full load if earthed at both ends.*	*I^2R loss in cable at full load.*	*Sheath loss as a per cent of I^2R loss.*
	VOLTS.	WATTS.	WATTS.	PER CENT.
Pykara	8·2	400	1680	24·0
Moyar	2·3	53	845	6·3
Mettur	3·7	220	980	22·4
Papanasam ..	1·4	32·6	500	6·5
Basin Bridge ..	3·3	140	820	17·0
Samayanallur ..	3·7	248	700	35·4

It would be seen from the above table, that in all the stations, the induced sheath voltage is less than the specified limit of 12 volts. It is therefore adequate to earth the sheaths at one end only, namely, the generator end, the glands at the transformer end being insulated properly.

With this method of grounding there is likely to be no danger of the glands sparking over and causing burning of sheaths and danger to personnel. It is however, necessary to ensure that the single earthing at the source end is done very effectively and connected to the station earth and maintained at very low resistance of less than one ohm.

It would be seen from the table that the sheath losses at Pykara, Mettur, Samayanallur and Basin Bridge are high and would materially reduce the rating of the cables.

The following practice has been approved for adoption in all future stations of the Department :—

(*a*) The induced sheath voltages should be calculated for individual cables and if they do not exceed 12 volts under normal full load conditions or 100 volts under fault conditions, the cable should be earthed at the generator end only, the glands at the transformer or switchgear ends being insulated properly by means of wooden blocks.

(*b*) If the induced sheath voltages exceed the above limits, the cable sheath should be sectionalised and insulated at one or more intermediate points by cutting and removing the sheath to a width of about half an inch and insulating; each length being earthed at a single point and cross-bonded as shown in Fig. 2, to neutralise sheath voltages.

1955

Network Analyser Study of the Madras Grid

By G. S. RAMA IYER, B.Sc., M.I.E.,
Executive Engineer (Electrical),

K. R. RADHAKRISHNAN, B.E., A.M.I.E.,
Assistant Engineer (Electrical).,

T. V. RAMADOSS, B.E.,
Junior Engineer (Electrical).

THE DEPARTMENT have been conducting a series of studies on the network analyser at the Indian Institute of Science, Bangalore, from October, 1951. The previous four studies were confined respectively to problems arising out of the planning of new projects, viz., (1) Machkund, (2) Periyar, (3) Kundah and (4) 20 MW. power supply from Travancore-Cochin State.

In the latest study, the various operating problems connected with the existing network were made on the A.C. network analyser at the Bangalore Institute in July 1954.

The scope of this article is to give in brief the description of the equipment used and the details of the study made.

The Network Analyser and its working.—The A.C. network analyser is a device on which an electric power network can be set up on a miniature scale by interconnecting various calibrated adjustable circuit elements like resistance, reactance and capacitance in per-unit values to represent the actual network under study. Actual operating conditions can then be introduced in the network to be investigated, after exciting it from a suitable source of supply. The electrical measurements in any part of the network can be made at a desk control board on shift key system by using the sensitive and critically damped ammeter, voltmeter, wattmeter and varmeter, provided on the analyser. The accuracy of the measurements is claimed to be within 2 per cent. The photograph shows the assembled view of the A.C. network analyser of I.G.E. make at the Indian Institute of Science, Bangalore. The studies were conducted on this analyser.

Problems involving balanced three phase currents and voltages are solved as single phase cases on a "line-to-neutral" basis. For unbalanced circuit problems, however, the use of symmetrical components is adopted. Representation of such an unbalanced system on a "line-to-neutral" basis is made by setting up individual sequence networks and then superimposing them suitably on the analyser. While setting up a problem on the analyser

20 DEC 1956

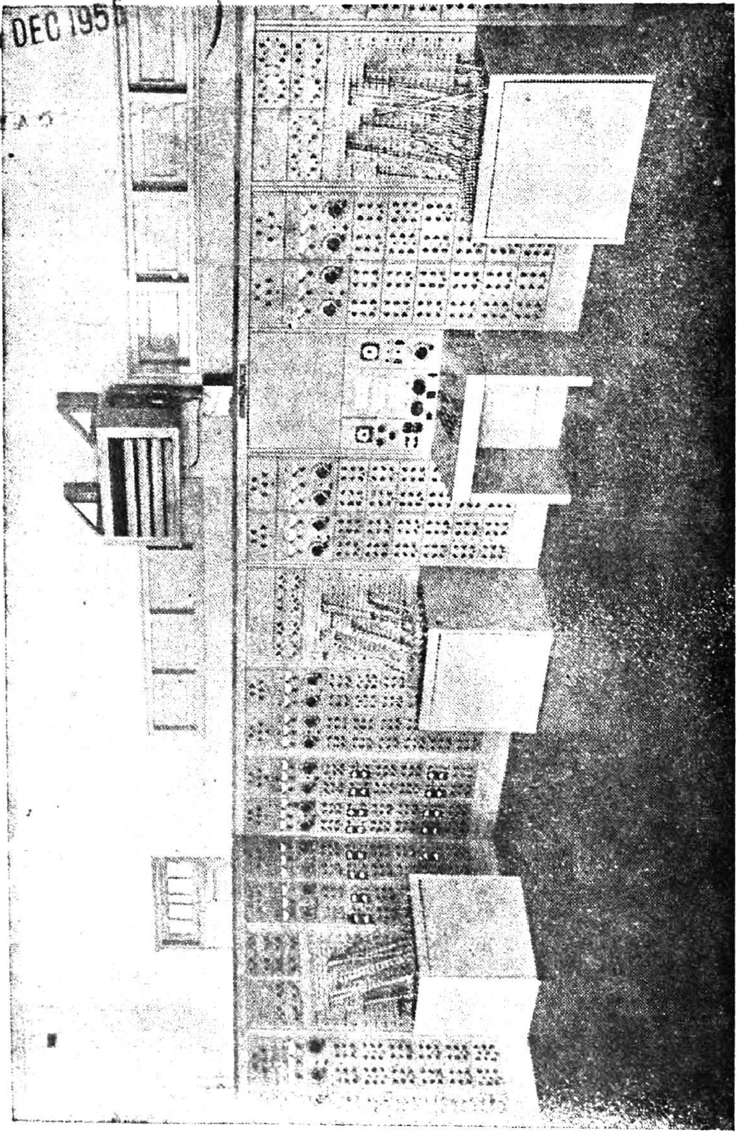

NET-WORK ANALYSER AT THE INDIAN INSTITUTE OF SCIENCE.

all the system constants are converted to "per unit" values on a selected bases within the range of the instruments available on the board.

Types of studies on Network Analyser—(*a*) *Load studies.*—(i) Circuit loadings—load flow in various circuits.

(ii) Generator terminal and internal voltages and phase angles.

(iii) Voltage levels and phase angles at the various stations on the network.

(iv) Power factor of generators for assumed load power factor.

(v) Reactive power capacity needed for effective voltage regulation at various load centres.

(vi) Tap range of transformers required.

(vii) Desirable location of new generating stations.

(viii) Effects of adding new transmission circuits.

(ix) Effects of installing reactors.

(x) Effect of increased system loadings.

(xi) Effect on the system consequent on line outages.

(xii) Effect of temporary failure of synchronous condensers.

(xiii) Effect of increased system voltages.

(xiv) Effect of increased conductor size.

(xv) Investigation of system losses and the means for reducing them.

(*b*) *Short circuit problems.*—(i) Maximum short circuit currents for determining circuit breaker duties.

(ii) Maximum and minimum fault currents and voltages for determining relay settings.

(iii) Determination of zero-sequence currents for inductive co-ordination problems.

(iv) Determination of ratings of grounding transformer.

(v) Effect of ground fault neutraliser (Peterson coil) on fault currents in the transmission network.

(vi) Effect of grounding at various points on a system.

(vii) Effect of various types of system grounding.

(viii) Effect of various generator or substation sectionalising bus schemes such as synchronous bus, ring or open ring buses.

(*c*) *Stability studies.*—(i) Steady state stability limits.

(ii) Transient stability limits with various types of faults.

(iii) Optimum switching times for various type of faults and fault locations.

(iv) Effect of different values of inertia in rotating apparatus on transient stability limits.

(v) Effect of changes in generator or system reactance on transient stability.

(vi) Determination of increase in transient stability limits with shorter switching and relay times.

(vii) Effect of switching and of bus arrangements on stability limits.

(viii) Effect of high speed reclosing of circuit breakers.

(*d*) *Special problems.*—(i) Determination of a simple equivalent for a complicated network.

(ii) Determination of currents and voltages in three phase circuits containing unbalanced impedances.

The present studies were concerned broadly with (*a*) power generation from the existing four hydro and two thermal power stations to meet the load demand of the power network in 1955–56, and (*b*) power generation with the addition of 105,000 KW with 3 units (and 140,000 KW with four units) of the proposed Periyar hydro station, to meet the expected load demand in 1960–61.

The power flows along the interconnecting lines of the grid, indicating the active and reactive powers shared by the generating stations and voltage levels at the various stations for conditions of minimum generation at Mettur and Papanasam, when operating at low head, were particularly checked. The adequacy of existing reactive apparatus, possible suitable locations for additional reactive apparatus to improve voltage levels at the various load centres, also received attention. The study for minimum generation conditions at Mettur and Papanasam hydro stations included the effect of operating each of the systems with one of the two or three E.H.T. lines kept out of service. Also, with the analyser set up as for generation for low water periods at all the stations, the symmetrical and asymmetrical "fault MVA" at each of the important station buses was also made, to check the adequacy of the rupturing capacity of the 110 KV or 66 KV circuit breakers in these. Also, steady state stability check was made for power flow on the Mettur-Madras inter-connector and the limit for economical power transmission was determined. Finally the very important aspect of "transient stability" in the operation of the interconnected power stations with two phase to ground fault was also studied for the following cases :—

(*a*) Fault near Mettur end on one of the feeders of Mettur-Singarapet 110 KV D.C. lines.

(*b*) Fault near Moyar end on one of the feeders of Moyar-Pykara 110 KV D.C. lines.

(*c*) Fault near Pykara end on one of the feeders of Pykara-Coimbatore 110 KV triple circuit lines.

Swing curves were drawn for all the stations operating in parallel with near end earth-fault relays operating to clear the breaker in 0·15 second and with the far-end earth-fault relays also operating to clear the breaker simultaneously in 0·15 seconds or sequentially in 0·3 second. Swing curves were also drawn with the near end and far end breakers clearing through impedance time relays in 0·3 second and 0·7 second. The critical fault-clearing time of the circuit breakers to help the stations to regain stability after the transient disturbance was assessed, in order to check the adequacy of the time of operation of the new fast-operating NSE_2-DY. type transverse differential earth-fault relays installed for the 110 KV parallel feeders between the stations of the 110 KV systems of Pykara, Moyar and Mettur as well as the 33 KV D.C. lines to Basin Bridge from Villivakkam sub-station.

The proposed changes and additions that are expected to take place in the transmission network of the Madras grid by 1955–56 were taken into consideration for the purpose of this study and a key diagram of the grid as adopted is shown in Fig. 1.

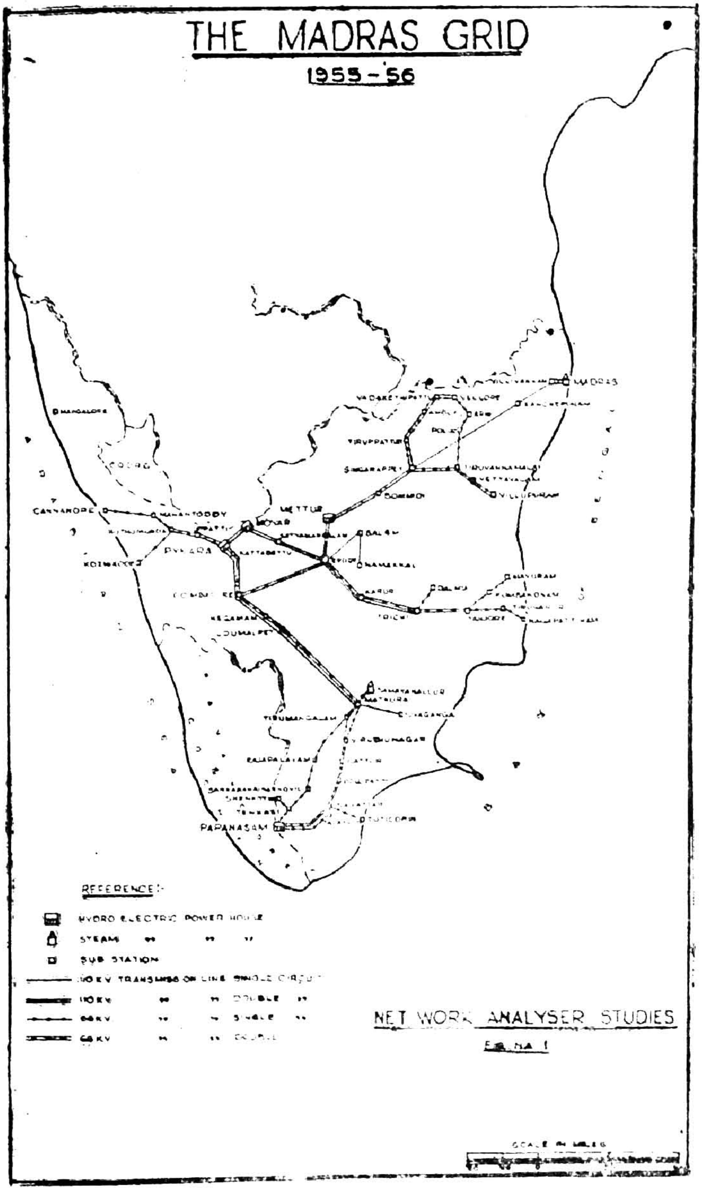

FIG. 1. POWERS SYSTEMS OF MADRAS GRID.

The grid was represented on the analyser with the corresponding reactance and susceptance of the lines, reactance of transformers, etc., as per the calculated data in per unit values on 20 MVA base, Fig. 2.

Power flow studies.—Four different cases of operation during the high water periods and six cases for the low water periods were studied.

Generating capacities.—The total generating capacity available in the Madras grid during the high and low water conditions at Mettur were assumed as given below :—

	High water conditions.	*Low water conditions.*
	In Megawatts.	
Pykara	56 with one spare.	70 without spare or 56 with one spare.
Moyar	24	27 without spare or 24 with spare.
Mettur	40	17 (Limited by water availability).
Papanasam	21	14 (Limited by water availability).
Samayanallur	14	14
Basin Bridge	42·5 (with spare).	62·5 (without spare). 57·5 (with 2 × 2·5 M.W. set spare).
Total ..	197·5 M.W.	182·5 M.W. with spares at Pykara and Moyar or 204·5 M.W. without spares in any P.H.

However, for representation on the analyser the local loads fed off the power houses were deducted from the respective generating capacities and only the net generation were taken into consideration. Fig. 2 shows the transformer capacities assumed and the loads at various locations as clubbed on a key diagram.

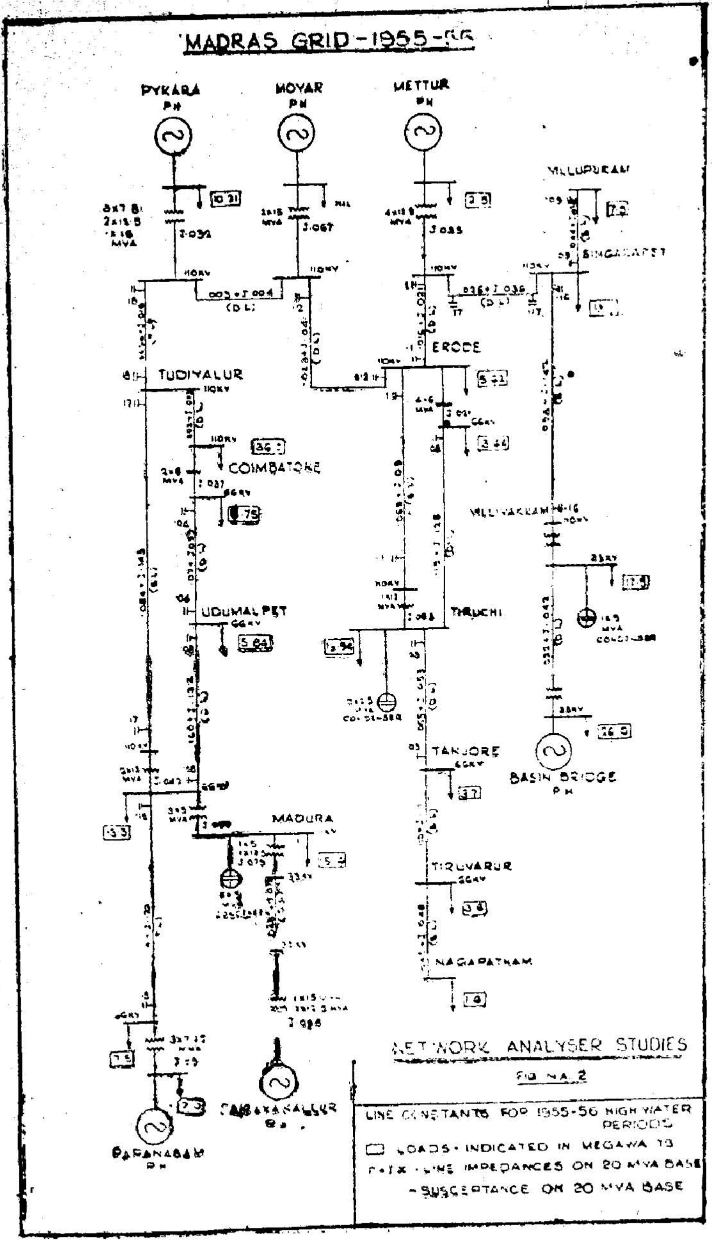

Fig. 2. Reduced Units of System Constants.

Loads.—The estimated simultaneous peak loads by 1955–56 assumed for the studies were as follows:—

Station.	*Load in M.W.*	*Remarks.*
Pykara P.H. Local	10·21	Includes Calicut and Cannanore loads.
Coimbatore 110 KV	36·00	Includes Coimbatore 11 & 22 KV loads.
Coimbatore 66 KV	4·75	Includes Tiruppur—Somanur loads.
Udumalpet 66 KV	5·84	Includes Pollachi loads.
Madura 66 KV	13·30	Includes Sivaganga—Tirumangalam loads.
Madura 11 KV	15·40	
Papanasam P.H.	2·00	
Papanasam 66 KV	7·50	Includes Koilpatti—Tenkasi loads.
Mettur P.H.	2·50	
Erode 110 KV	5·62	Includes Salem loads.
Erode 66 KV	3·44	Includes half of Karur loads.
Tiruchi 66 KV	13·94	Includes Dalmia loads and half of Karur loads.
Tanjore 66 KV	3·70	Includes Mayavaram—Kumbakonam loads.
Tiruvarur 66 KV	3·60	
Nagapattinam 66 KV	1·60	
Villupuram 110 KV	7·50	
Singarappet 110 KV	13·60	
Villivakkam 33 KV	17·50	
Basin Bridge 11 KV	26·00	
	194·00 M.W.	

The loads were balanced with the generator by suitable adjustments of the output of the various generating stations except one station which was kept as swing and at the same time maintaining the normal operating voltage at the various generating stations. The swing station is not adjusted during load balance but the reading obtained by this station after the balance is obtained is merely recorded. This is necessary because the losses in the grid for which no allowance is made initially will have to be suitably catered for. For study during high water conditions, the Pykara station was allowed to swing and during low water conditions the Basin Bridge station was made to swing. The power factor for all the loads was assumed to be 0·9 lag.

The generation voltages and power transformer taps at the various stations were kept at the following

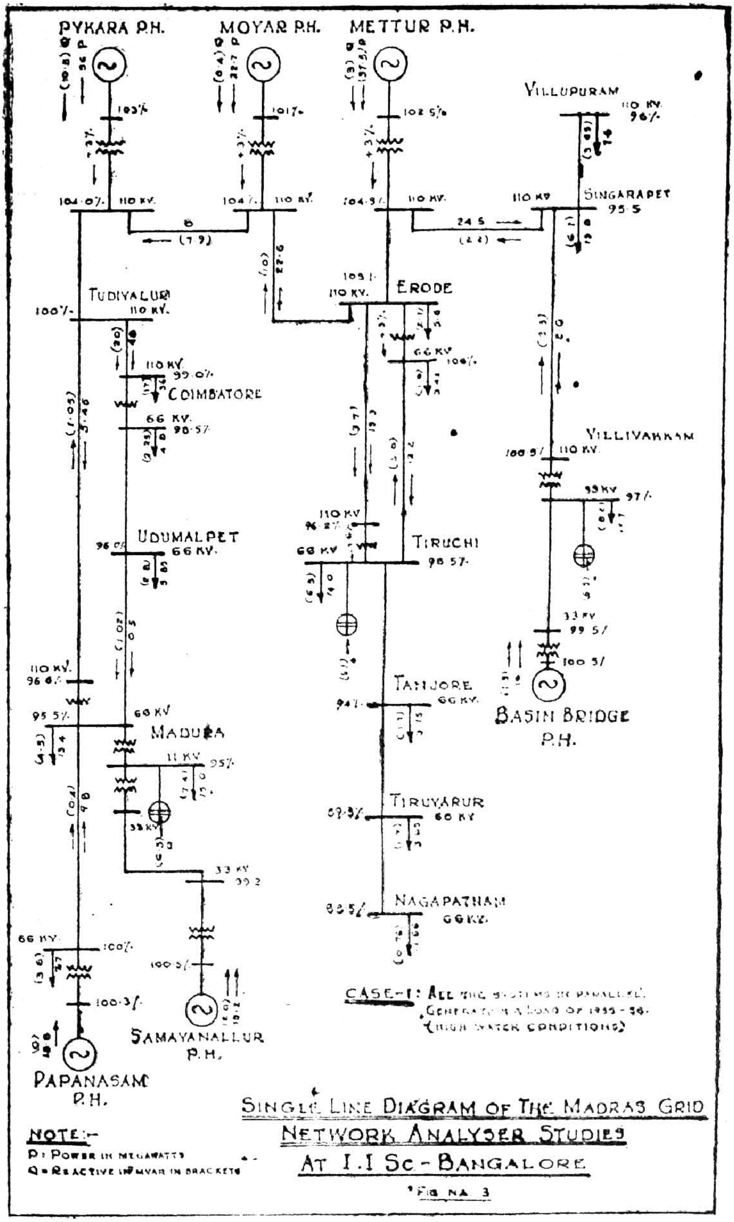

FIG. 3. VOLTAGE LEVELS WITH HIGH WATER CONDITIONS.

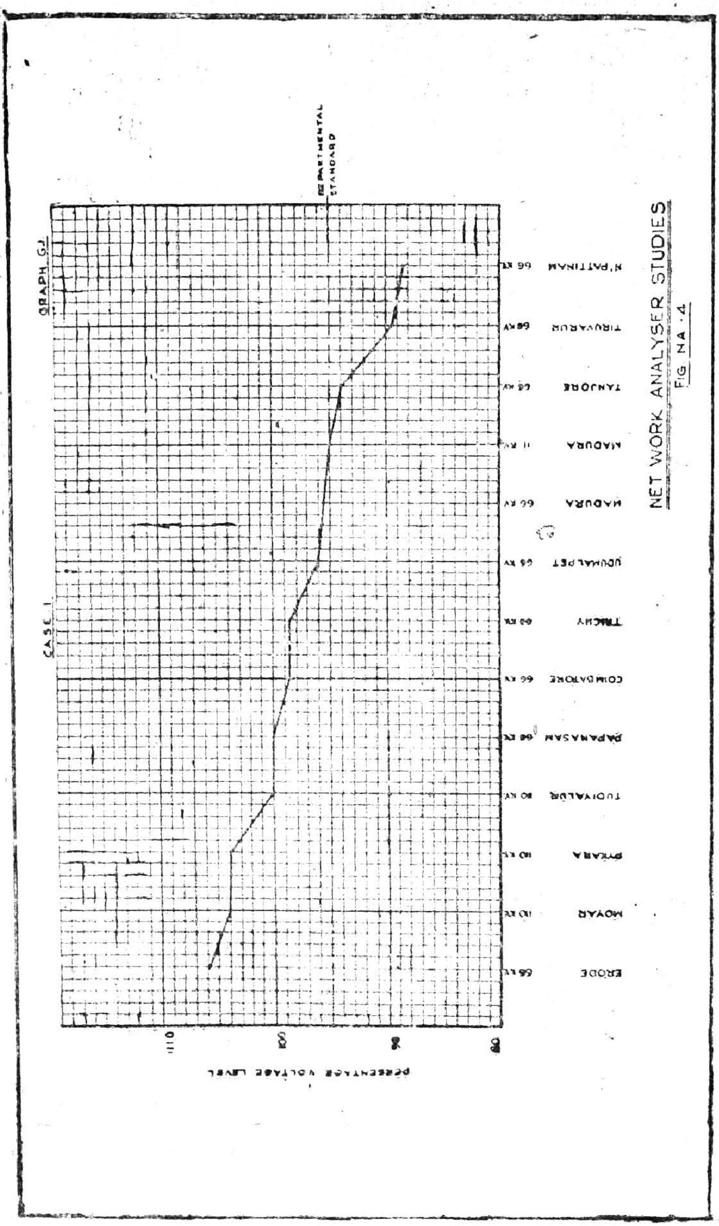

FIG. 4. VOLTAGE LEVELS AT STATION BUSES.

levels to maintain normal voltages at the E.H.T. buses of the various substations.

Generation voltages.

		PER CENT.	
Pykara	..	103	11·3 KV
Mettur	..	102·5	11·25 KV
Moyar	..	101	11 1 KV
Papanasam	..	100·3	11·03 KV
Madras	..	105	11·5 KV
Samayanallur.		100·5	11·05 KV

Transformer taps.

		PER CENT.
Pykara, Moyar and Mettur Power Houses.	..	+3
Erode Autos	..	+3
Trichy Autos	..	+6

Rest of the Places—Kept at normal tap.

Case I.—All the systems were operating in parallel and the generating and loading conditions were those of the high water level conditions in 1955–56. The power flow and voltage levels were recorded on flow chart. Fig. 3.

A general review of the flow chart indicates that the respective systems generate the requisite demands during high water conditions and the inter connectors do not carry much load between systems during normal operation. This condition lends itself for independant operation of systems or operating the groups (P), Periar, Papanasam and Pykara stations, and (M)—Moyar, Mettur, Madras stations independantly depending upon the convenience of the various power stations.

The voltage levels at various places are indicated in the graph Fig. 4.

Tiruvarur and Nagapattinam suffer from low voltages, viz., 89.3 per cent and 88.5 per cent respectively.

To improve the voltage levels at those stations three alternatives were studied, viz.—

Alternative i.—Increasing the capacity of the existing synchronous condenser at Tiruchirappalli from 5 MVAR to 10 MVAR.

Alternative ii.—Duplicating the Tanjore-Tiruvarur 66 KV section.

Alternative iii.—Installing an additional 5 MVAR condenser at Tiruvarur.

The voltage levels obtained in the three alternatives as compared to those obtained in case 1, are given below :—

	Case I.	*Alternative I.*	*Alternative II.*	*Alternative III.*
	PER CENT.	PER CENT.	PER CENT.	PER CENT.
Erode 110 KV	103·0	103·5	102·7	104·0
Erode 66 KV	106·0	107·0	106·0	107·5
Tiruchi 66 KV	98·5	101·5	98·5	102·0
Tanjore 66 KV	94·0	97·5	94·0	99·0
Tiruvarur 66 KV	89·3	92·5	91·5	97·3
Nagapattinam 66 KV	88·5	92·0	91·0	96·5

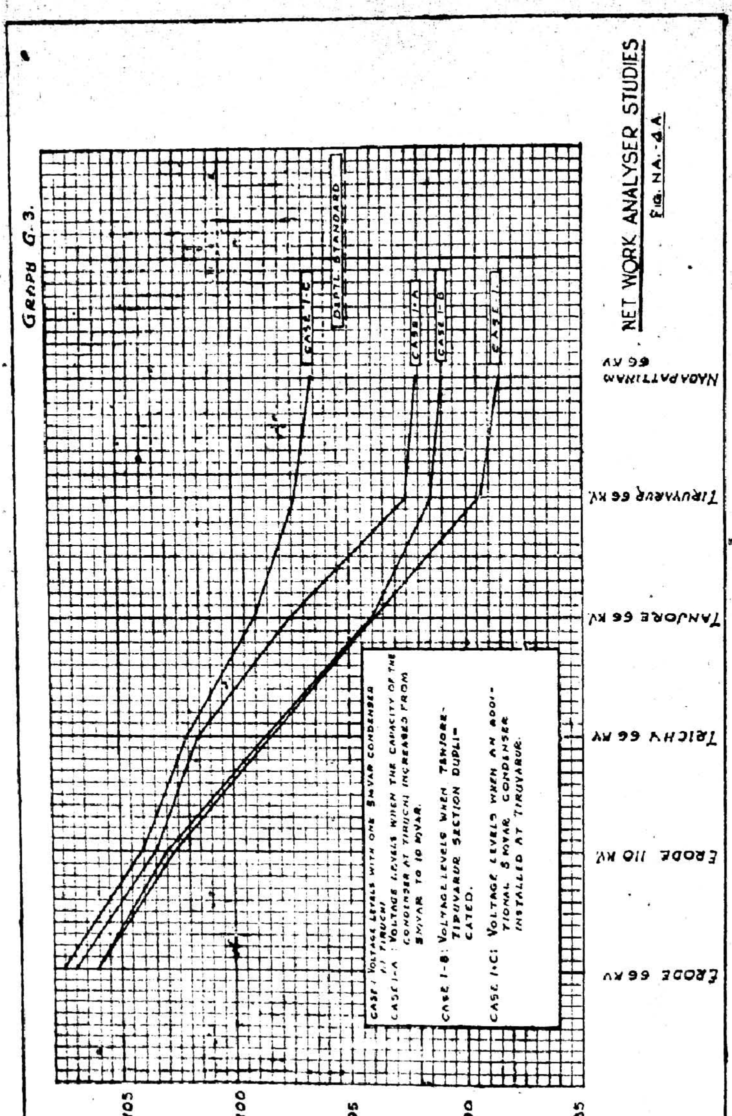

FIG. 4-A. ALTERNATIVE STUDIES FOR TIRUCHIRAPPALLI—NAGAPATTINAM LINE.

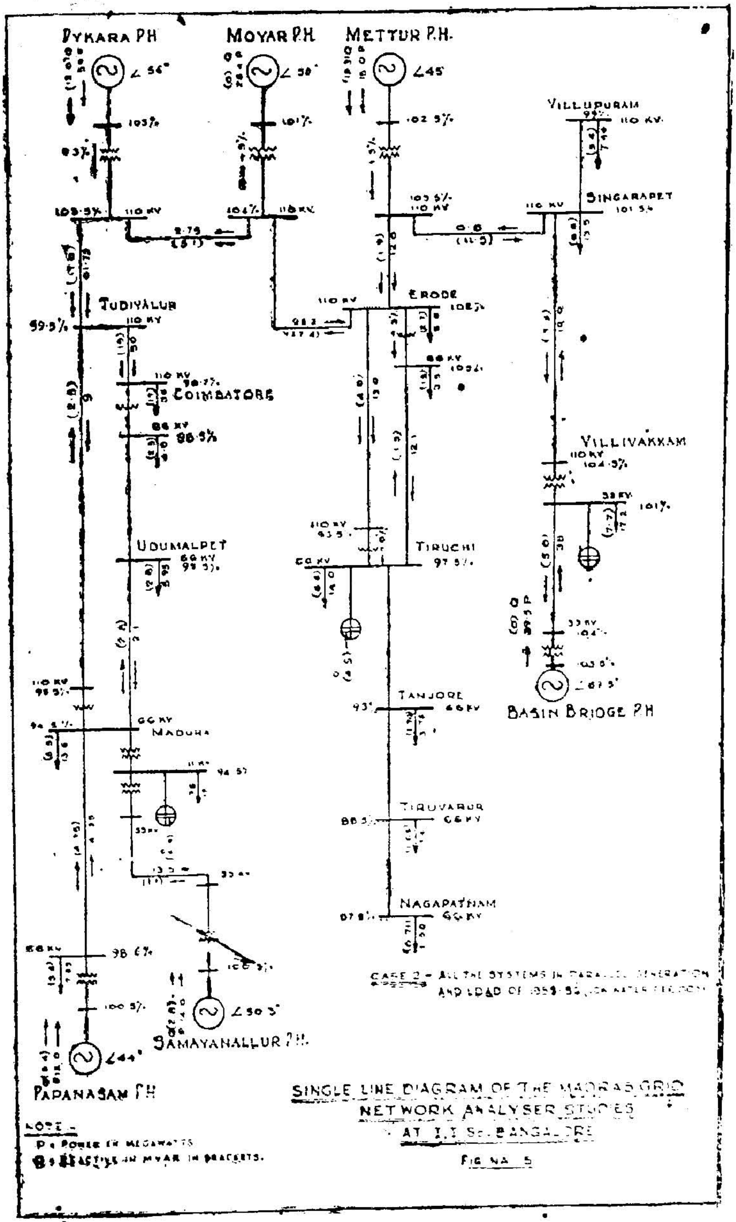

FIG. 5. VOLTAGE LEVELS WITH LOW WATER CONDITIONS.

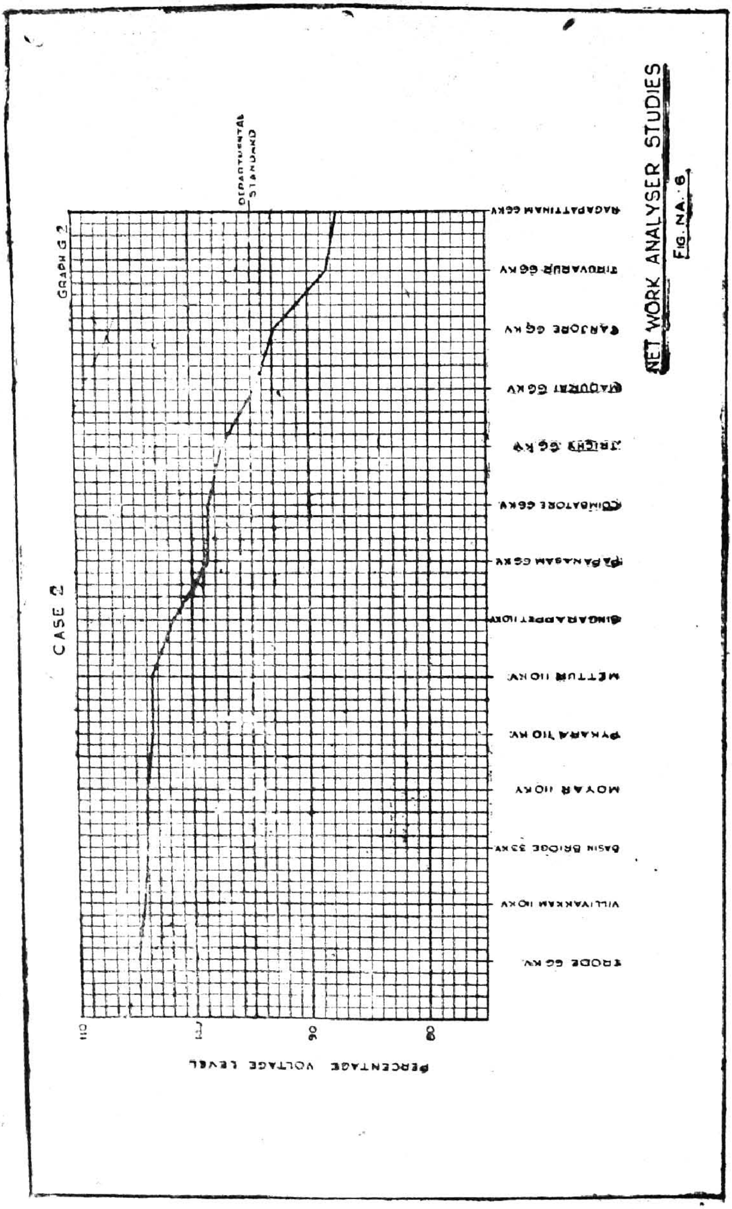

FIG. 6. VOLTAGE LEVELS AT STATION BUSES.

A graph showing the voltage levels under these alternatives is also furnished Fig. 4-A.

The installation of an additional condenser of 5 MVAR capacity at Tiruvarur, keeping the capacity of the condenser at Tiruchirappalli at 5 MVAR only appears to be the best arrangement and would work out to be more economical also.

Case II.—In this study all the operating conditions were kept the same as in case 1, except that the generating capacities in the grid were changed to that of the low water periods.

The power flow, generation and voltages are indicated in the flow chart Fig. 5.

From the power flow in the various lines, it would appear that the Basin Bridge Power House was feeding loads up to Singarappet which included Vellore and Villupuram loads also. The Mettur-Singarappet feeders did not transport any appreciable power, but contributed nearly 11·5 MVAR. of reactive power from Mettur machines.

The voltage levels at various places are shown in Fig. 6. It would be seen that the voltage levels at Tiruvarur and Nagapattinam are still found to be bad and will improve if the installation of Tiruvarur condenser is implemented as discussed earlier in Case I.

The net output of Basin Bridge, which was kept as swing after meeting the local loads of 26 M.W. was found to be 39·5 M.W. (The total output being 39·5 + 26 = 65.5 M.W.). This would meet 17·2 M.W. of 33 K.V. loads at Villivakkam and also afford relief to Mettur System to an extent of 19 M.W. if power cuts were to be avoided in our grid. It may be noted that for transmitting this power from Basin Bridge to Singarappet, the following additional transformer capacities and lines would be necessary :—

(i) Construction of a 33 K.V. second double circuit line between Basin Bridge and Villivakkam to carry 39·5 M.W. on the two D.C. 33 K.V. lines.

(ii) Installation of two more 10 M.V.A. 11/33 K.V. transformers at Basin Bridge and one No. 7·5 M.V.A. 33/110 K.V. transformer at Villivakkam.

The studies indicate that the boiler capacity at Basin Bridge should be increased quickly to utilize the available generating capacity in order to meet the demand of the grid without any power cuts during 1955–56.

During low water conditions the effect of line outages on the following lines were studied :—

Moyar—Erode,

Pykara—Coimbatore,

Mettur—Singarappet,

Papanasam—Madura, and

Coimbatore—Madura lines.

One 110 K.V. circuit in each of the first 3 sections, one 66 K.V. circuit in Papanasam—Madurai section and the 110 K.V. circuit of the Coimbatore—Madura section were

assumed to trip out of service or taken out for maintenance purposes.

While in the first four cases the remaining line or lines are able to transmit the required power without any adverse effect, in the case of the Coimbatore—Madurai line, the 66 K.V. D.C. line will not be able to transmit the power within the permissible voltage limits if the 110 K.V. line is out of service. The voltage of Madurai in this case will be 86·5 per cent.

Generally the studies indicate that transmission in our grid has been designed properly taking into consideration all possible operating conditions.

Steady state stability limit.—The 110 K.V. link between Villivakkam and Singarapet must carry 19 M.W. during the low water condition. The steady state stability limit of this weakest link in the grid was checked. This was studied as follows :—

The loading and generating conditions were kept as per case II but the generators represented on the Analyser were adjusted to their synchronous impedance values. The steady state stability of any two systems is determined by increasing the phase angle difference between the two machines. The systems are said to be stable only if an increase of angle between the sending and receiving end voltages results in an increased power transfer. Any marked deviation from this result or increase in the losses would indicate unstability. The following results were obtained during the study.

For the generating and load conditions during the low water periods the power output and phase angles of the generators at Basin Bridge and Mettur were—

	Generation.	*Instrument reading of phase angle.*
Basin Bridge	41·5 MW	94°
Mettur ..	14·3 MW	50°

Actual angle of displacement between the rotors of two stations is 94—50=44°.

When the phase angle of Basin Bridge was increased to 99° and that of Mettur decreased to 45°, the changed generating conditions were :—

	Generation.	*Instrument reading of phase angle.*
Basin Bridge	42·4 MW	99°
Mettur ..	14·3 MW	45°

Actual angle of displacement between the rotors of two stations is 99—45=54°.

For an increase in the difference in phase angle from 44°, to 54° the power output at Mettur had remained unchanged. The additional power of 0·9 M.W. generated at Madras had gone evidently to meet the increased losses.

For further increase in the difference in phase angle from 54° to 64° the conditions were :—

	Generation.	*Instrument reading of phase angle.*
Basin Bridge	43·05 MW	104°
Mettur ..	13·20 MW	40°

Actual angle of displacement between the rotors of two stations is 104—40=64°.

Hence the response appears to be on the right direction or sense. The observations would indicate that the systems were operating just within steady state limits for the 1955–56 load conditions or in other words, that, it is a limiting condition of loading of the inter-connector.

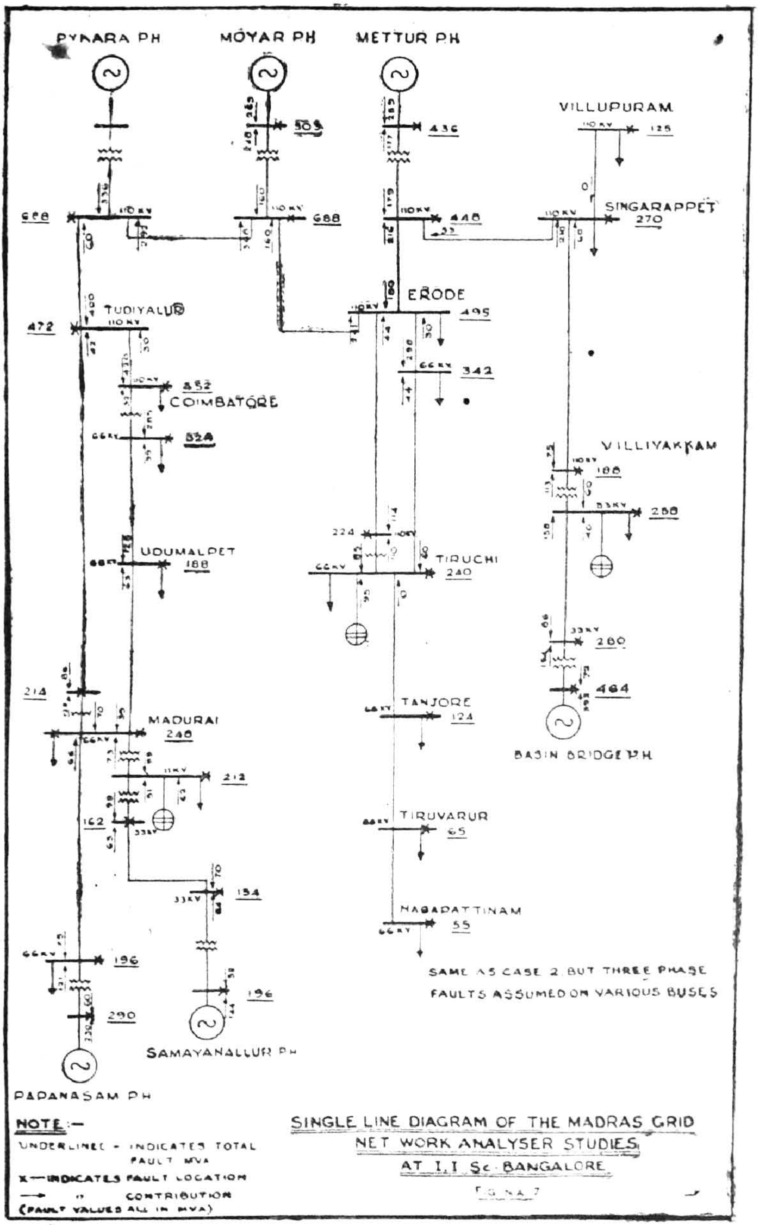

FIG. 7. STUDY OF MVAs UNDER FAULT CONDITIONS.

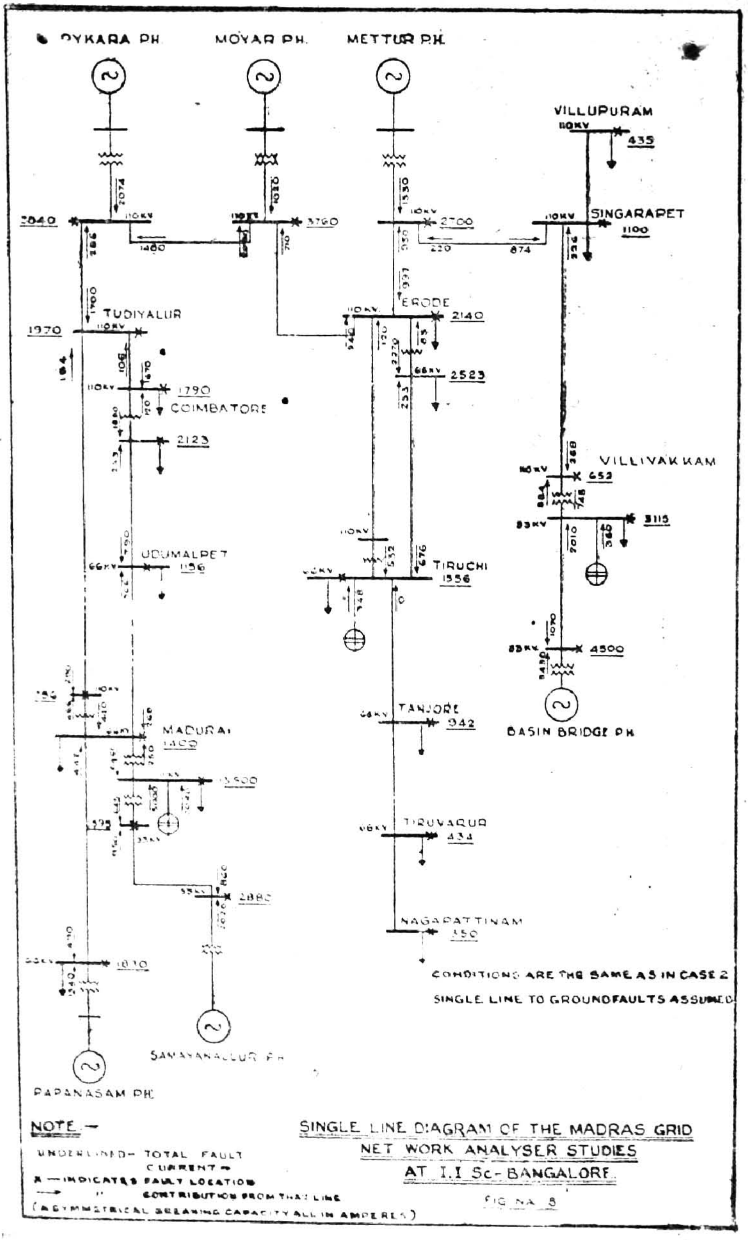

Fig. 8. Study of Ground-Fault Currents.

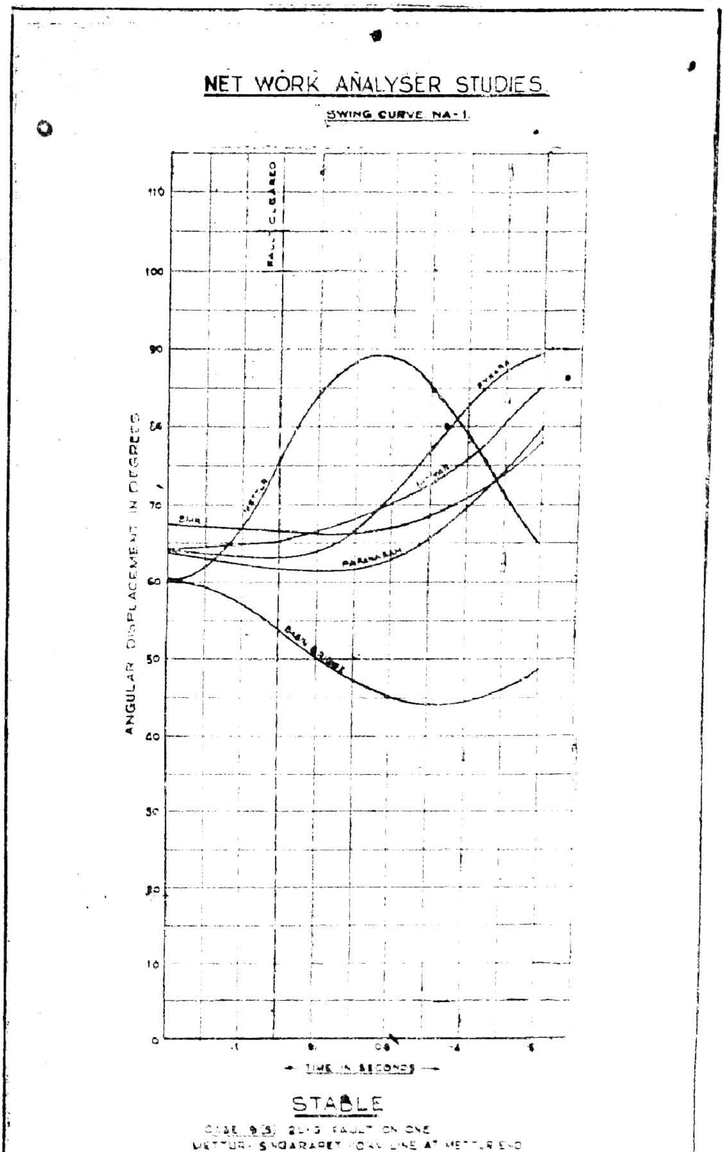

FIG. 9. SYSTEMS STABILITY CURVES FOR FAULT ON METTUR SINGARAPET LINE (0·5 SECONDS).

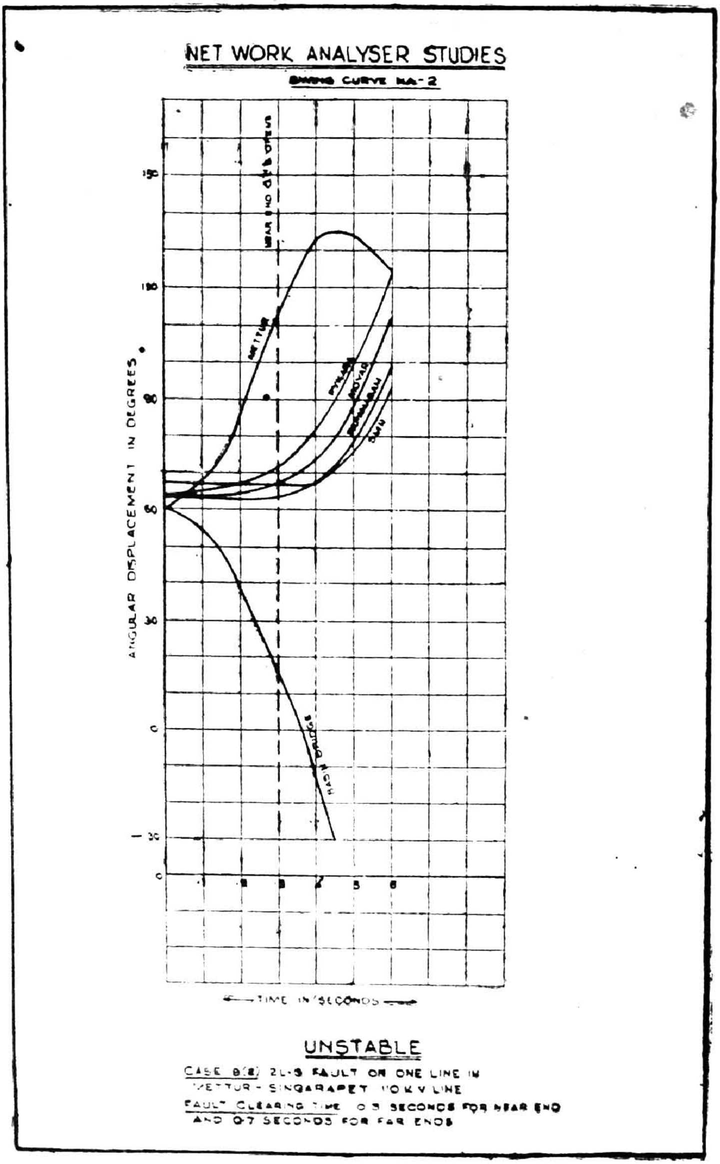

FIG. 10. SYSTEMS STABILITY CURVES FOR FAULT ON METTUR SINGARAPET LINE (0·3 SECONDS).

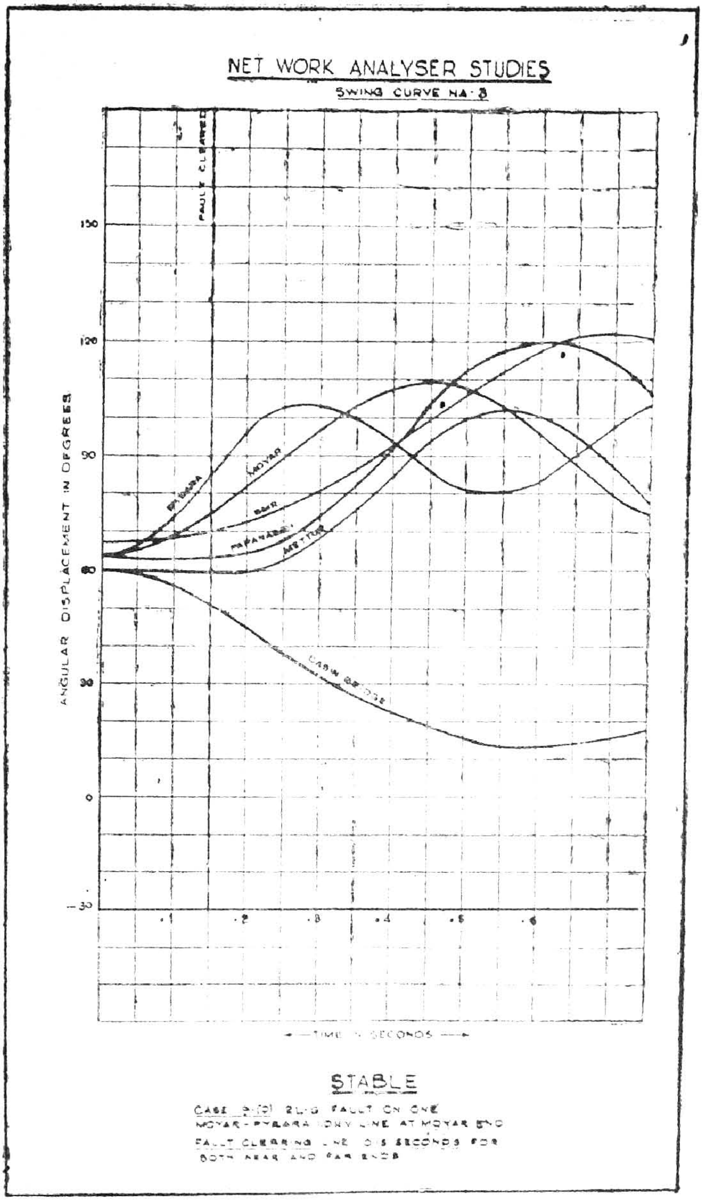

Fig. 11. Systems Stability Curves for Fault on Moyar Pykara Line (0·15 Seconds).

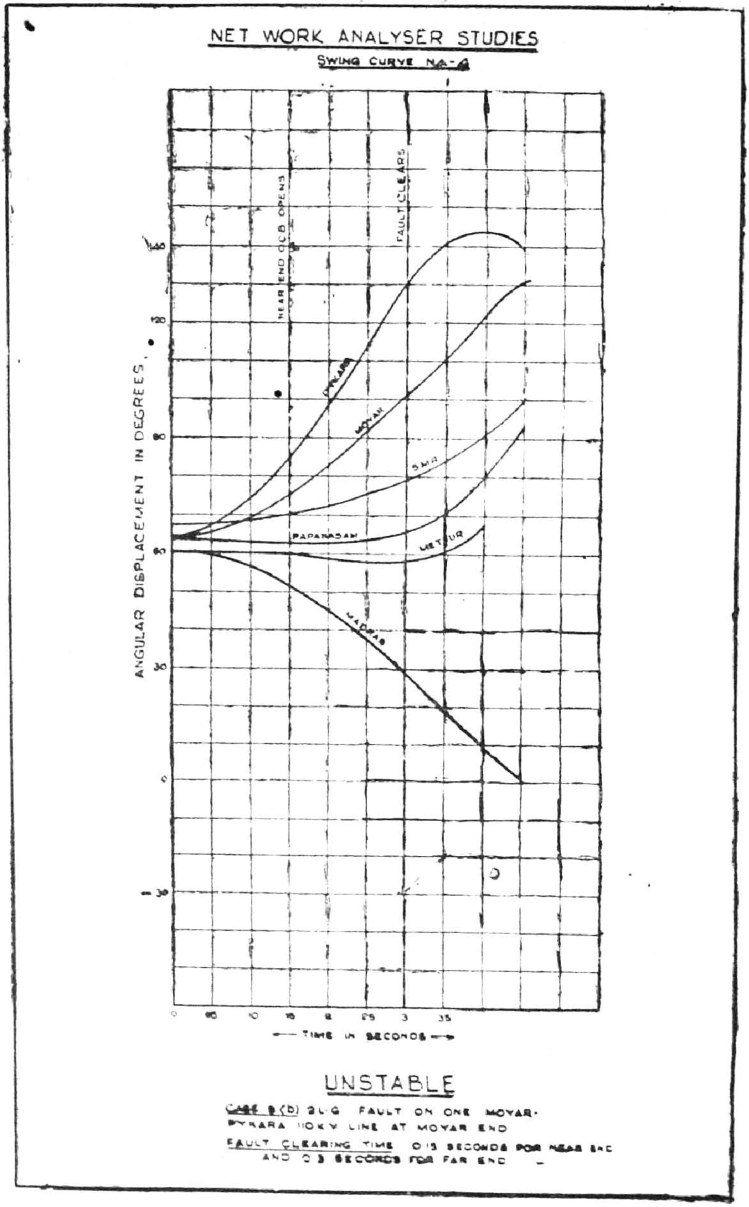

FIG. 12. SYSTEMS STABILITY CURVES FOR FAULT ON MOYAR PYKARA LINE (0·3 SECONDS).

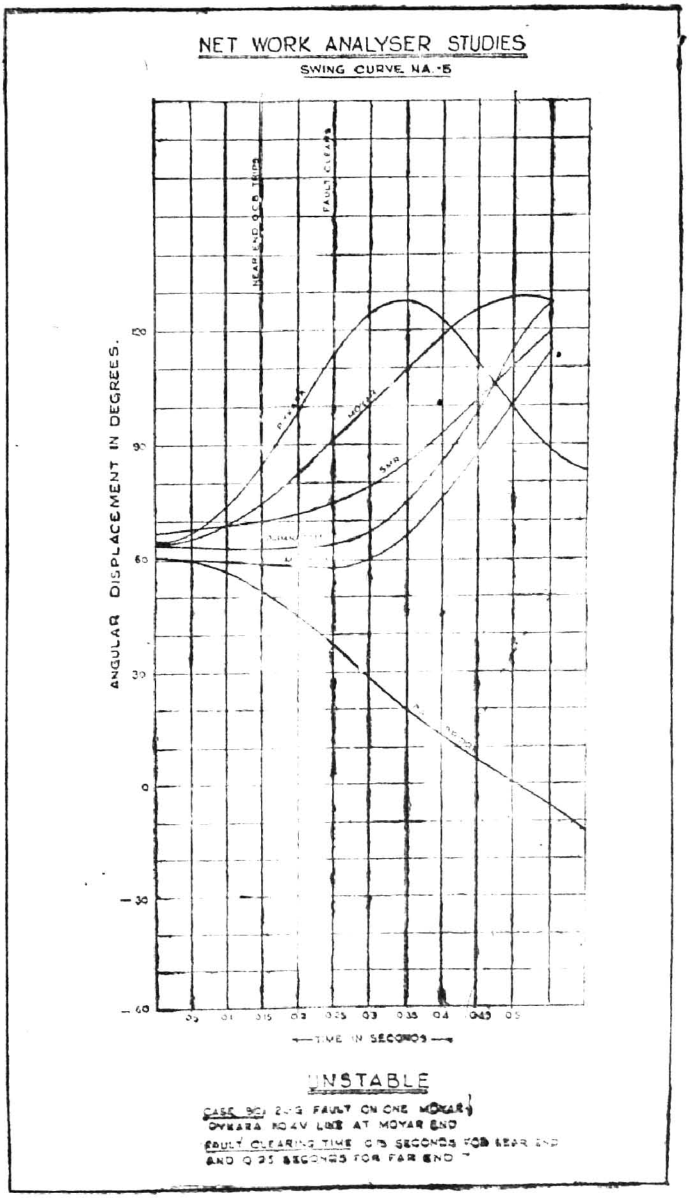

FIG. 13. SYSTEMS STABILITY CURVES FOR FAULT ON MOYAR PYKARA LINE (0·25 SECONDS).

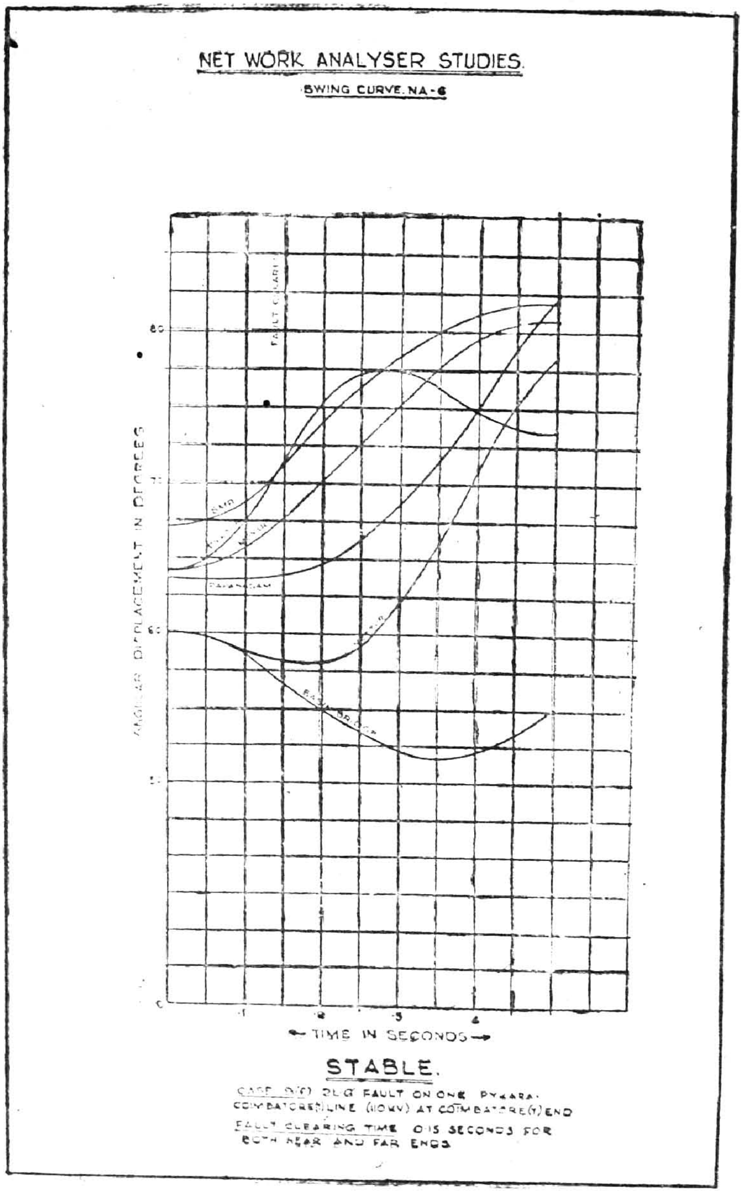

FIG. 14. SYSTEM STABILITY CURVES FOR FAULT ON PYKARA-COIMBATORE LINE (0·15 SECONDS).

When the generation at Mettur was reduced to 10 M.W. and the inter connector made to carry nearly 22 M.W. thereby, the results were as follows :—

	Generation.	*Instrument reading of phase angle.*
Basin Bridge.	47 MM	93·5°
Mettur ..	9.9 MW	62°

Rotors displacement angle is 93·5 — 62 =31·5°

For increase in the difference in phase angle from 31-5° to 41·5° the conditions were—

	Generation.	*Instrument reading of Phase angle.*
Basin Bridge.	47 MW	98·5°
Mettur ..	11·4 MW	57°

Rotors displacement angle is 98·5 — 57 =41·5°.

The generation at Basin Bridge *has remained unchanged while it should have increased.* The generation at Mettur *has increased while it should have decreased.* The system loss in this case was of the order of 17 per cent, having increased.

It would, therefore, be seen that any *attempt to increase* the power flow in the interconnector *beyond* 19 *M.W.* resulted in an unstability from steady state conditions.

Hence it may be concluded that 19 *M.W. transfer is the limit for this* 110 *K.V. single circuit interconnector between Villivakkam and Singarapet.*

Short circuit studies.—The short circuit studies were made to arrive at the rupturing capacities of the circuit breakers for three phase faults on various E.H.T. buses. The positive sequence net work with reactance only was made out and represented on the analyser with all the machines in the stations working. The sub-transient reactances for the rotating machinery were adopted and the fault at various buses of the stations assessed and the results were recorded.

The chart enclosed furnishes the fault location, total fault M.V.A. and contribution from various branch lines to the fault. Fig. 7.

Single line to ground fault for grading of relays.—Single line to ground faults on all E.H.T. buses were also made for proper grading of the relays. The fault location, total fault and contributions from various branches are indicated in the chart enclosed. Fig. 8.

Transient stability studies.—Transient stability studies were made for the purpose of determining the ability of the power systems to maintain synchronism following a disturbance like a two phase to ground fault. The problems were solved on the Analyser, by step by step method, involving representation of successive conditions during the occurrence and clearance of faults at short intervals say ·05 sec. For each generator the angular changes from the normal synchronous positions were calculated by using the generator acceleration constant and the analyser readings giving the power before and after the disturbance. The angular positions of the various machines were plotted against time, measured from the inception of fault. From the curves so obtained, known as swing curves, the stability of the systems was determined from the pattern of curves whether they align themselves in unison or drift apart. Six cases

of transient stability studies were made assuming faults on the following important interconnectors and different fault clearing times. All the systems were assumed to operate in parallel—

(a) For a double line to ground fault at Mettur end on one of the Mettur–Singarapet line, the systems were stable only when the faults were cleared in 0·15 second at both ends. Vide the swing curves S-1, S-2.

(b) For a double line to ground fault at Moyar end on one of the Pykara-Moyar 110 KV. line, the systems were stable only when the faults were cleared in 0·15 second by both the near and far end O.C.Bs. Vide swing curves S-3, S-4 and S-5.

(c) For a double line to ground fault near the Coimbatore (Tudiyalur) bus on one of the 110 KV. Pykara-Coimbatore lines the systems were stable only when the faults were cleared in 0·15 second. Vide S-6.

In general, the systems were found to be unstable only if the relay tripping times for clearing of faults *are more than 0·15 second at both* near and far ends. The interval of 0·15 second includes the time taken for the operation of the relays and circuit breakers. The relays ordered for installation in our grid for parallel feeder protection of inter connectors are ' DY '-N S E differential E/L relays. With the relay operating time of 2 to 3 cycles, as claimed by the makers, i.e., ·04 to ·06 seconds with an addition of ·05 second for the O.C.B. opening time, the total time for clearing the fault will be less than 0·15 of a second. With this timing the systems are found to be quite stable and the relay would afford adequate protection, provided they are maintained in good condition. In fact the latest review of the operation of the relays in the Moyar-Erode, Erode-Mettur and Pykara-Moyar D.C. 110 KV. lines, indicate that the relays are generally satisfactory. The relays on Mettur-Singarapet lines are just serviced and performance of these relays remains to be watched.

Acknowledgment.—We are thankful to the Assistant professors Messrs. H. N. Ramachandra Rao and B. N. Narayana Iyengar who were greatly helpful in the above studies on the A.C. Network Analyser.

PYKARA PUBLIC ... DEC 1954

Progress During Quarter Ending 30th June 1954

Construction Branch

Pykara Plant Extensions—III stage.—Camp, buildings and roads were completed. Erection of power and outlet pipe with their valves and masonry building for upstream and downstream wing walls werr completed. Work on earthen embankment both on the upstream and downstream sides is in progress. Erection of 4th penstock line with their valves was completed and tested. Construction of Singara power house building extension was completed. Erection of generating units 6 and 7 was completed and the units were commissioned after necessary tests on 30th May 1954 and 4th June 1954 respectively.

Madurai Thermal Scheme.—The construction of oilstorage tank and ten blocks of "2G" type quarters was completed. The construction of additional quarters has been taken up and was in progress.

Oil firing of Steinmuller boilers was tried. Fixing automatic rocking chute arrangement for all the three Babcock and Wilcox boilers was completed.

Transmission Lines and Substations—Erode Substation.—Basement and superstructure, of construction of Assistant Engineer's office up to 2 feet and construction of store shed up to 5 feet were completed. The 50-ton transformer track was re-assembled and put into service.

Salem Substation.—Erection of structures and equipment for the three transformer bays was completed. The substation was energised in two sections on 30th May 1954 and 2nd June 1954 respectively.

Salem-Namakkal 110 KV line.—Alignment of the route for a distance of 12·5 miles was completed.

South Kanara Scheme.—Jungle clearance, check survey, excavation for foundation of towers, stub setting and concreting and erection of towers were in various stages of progress on the Hulikal-Mangalore 110 KV line and Udipi-Hiriadka-Karkala 33 KV line.

Pykara-Coimbatore-Madurai 110 KV line—Pykara-Coimbatore reach.—In the hill section, work on clearance, excavation, stub setting and concreting tower erection was nearing completion, and stringing of conductor was in progress.

In the plains section, all works except earthing for six locations and construction of retaining walls were completed.

Coimbatore-Madurai 110 KV line.—All the works were completed. Reach 1—608 was handed over to Operation and Maintenance, Pykara System.

Mettur Workshop Expansion Scheme.—All works connected with the workshop expansion except erection of some machinery were

completed. Eighty-seven per cent of the work relating to the machinery was done so far.

Madras Plant Extensions.—The first stage extensions were mostly completed. The transfer of controls of 15 and 12·5 KW. set at the 'A' station to the 'B' station control room was completed.

Under the second stage extensions, erection of one of the two boilers was nearing completion. Erection of the 15 M.W. turbo alternator switchgear was nearing completion.

Operating Systems.

Hydro Systems.

Generation.—The station peak load, units generated, and the system peak load, were as follows :—

Name of system/station.	*Station peak load in KW.*	*Units generated in millions.*	*System peak load in KW.*
Pykara	55,000	58·37	52,450 (Pykara and Moyar)
Moyar	36,600	25·32	
Mettur	40,200	52·65	49,900
Papanasam	28,000	27·42	23,000 (Papanasam and Madurai Thermal)
Madurai Thermal	10,000	11·83	
Udipi	189	·13	..
Karkala	41·5	·002	..

The following services were connected during the quarter :—

	Agricultural.	*Industrial.*	*Domestic.*
Pykara system	140	13	1,072
Mettur system	83	14	377
Papanasam system	89	37	1,321

Hydro Generation Circle.—In Singara power house, acceptance tests on No. 6 and No. 7 machines and their transformers were carried out and units 6 and 7 put in to service. The Shenbagapudur 66 KV. S.S. was changed over to 110 KV. operation and Moyar-Erode circuit was put into 110 KV operation. The impedence and parallel feeder protection relays for the 110 KV Pykara-Moyar-Erode double circuit lines were commissioned. The 3,000 KVA transformer at Shenbagapudur S.S. was connected to No. 1 Moyar-Erode 110 KV feeder on 6th June 1954 and energised on 7th June 1954.

The new relay panel for Singarappet No. 1 (110 KV) at Mettur power house was commissioned. The F & P 110 KV A.B.C.B. at Erode which failed last year was brought to service at 110 KV.

The normal and maximum rating tests were conducted on Steinmuller boilers at the Madurai Thermal Station.

Distribution.—Twenty-one schemes, relating to extension of supply for industrial, agricultural and domestic

purposes in Coimbatore, Tiruppur, Udamalpet, Theni and Udipi areas and two numbers schemes, relating to Somanur-Avanashi and Somanur-Karadibavi 33 KV lines, were under various stages of progress.

Mettur Electricity System.—The total outturn of the Mettur workshop during the quarter was of the value of Rs. 4·94 lakhs.

The permanent 66 KV. S.S. at Salem was commissioned into service.

The following schemes were energised and handed over to operation and maintenance during the quarter, viz., Mohanur; O. Jedaipalayam, Nanjai Pugalur, Dharmapuram, Karimangalam, Kalavai, Adiyur, Senoor and Gudiyattam.

Papanasam Electricity System.—The Sivaganga S.S. was commissioned at 66 KV on 27th May 1954 with 2 Nos. new 3,000 KVA 66/22-11 KV.

The following extension schemes were completed :—

(1) Navinipatti extension,

(2) Tiruvedagam extension,

(3) Desamanickam extension,

(4) Ramayanpatti extension.

Thermal System.

Madras Electricity System.—The station peak load units generated and the system peak load were as follows :—

Name of station.	*Station peak load in KW.*	*Units generated in millions.*	*System peak load in KW.*
'A' station	21,400	27·338	31,000
'B' station	15,000	19,836	
'C' station	2,200	0·387	

A total of 168 D.C. services were changed over to A.C. with a connected load of 214 KW.

Forty-two agricultural services, 51 industrial services and 1,074 domestic services were connected during the quarter.

At 'B' station, the contractors carried out the acceptance test at economic and H.C.R. rating on boiler No. 4. Maximum possible relief was afforded to the hydro systems and some relief was availed by Madras from hydro systems during the evening peak load periods during this quarter.

Sixty-six major construction works were progressing during the quarter,

About 32,000 consumers' accounts were mechanised to end of June 1954.

Accounts Branch

The Department earned a revenue of Rs. 138·85 lakhs for the quarter ending June 1954 against the working expenses including suspense amounting to Rs. 71·27 lakhs. The capital expenditure for the quarter amounted to Rs. 12·58 lakhs (inclusive of suspense).

The following loan contributions have been received in the various systems to end of May 1954 :—

System.	LAKHS.
1. Pykara	7·99
2. Mettur	3·04
3. Papanasam	2·85
4. Madras	12·60
Total ..	26·48

Technical Branch

Electrical.—The following were some of the more important works attended to during the quarter.

Orders were placed for supply of certain essential spares for the generators, outdoor switchgear, etc.

In connection with South Kanara extensions, sag charts for conductor and earthwire were sent to the field.

Steel erection drawings for various sub-stations under E. 188 ordered on Messrs. Crompton Company, were approved.

In connection with Erode-Salem, Erode-Tiruchirappalli-Dalmiapuram extensions, contracts to specification E 165 with Messrs. Crompton, Associated Electrical Industries (India), Ltd., and British Callenders Cables, Ltd.. for transformers for Satyamangalam sub-station, revised drawings for the indoor control panel were approved and copies of drawings were forwarded to the field.

Tenders were received against the re-issued specification E 192 and are under scrutiny.

The four 10,000 lb./hr. boilers in the 'A' station were disposed off for a price of Rs. 41,111-11-0. The two 1,500 KW. turbo alternator sets which were also advertised for sale along with the above boilers were retained as the prices offered were low.

The specification for the III stage plant and machinery under Madras Plant extensions was finalised at the Central Works Power Commission and Director General, Store Department and complete copies of the finalised specification were sent to Director General, Store Department, New Delhi.

A preliminary scheme report for the proposed lignite thermal station at Neiveli is under preparation.

The tenders for (1) A.C.S.R. and copper conductors, (2) lightning arresters, (3) second hand steel rail poles, (4) H.T. insulators were analysed. The tenders for distribution transformers are under scrutiny.

Detailed estimates for power house generating plant and control gear, power station auxiliaries, etc., in connexion with Kundah hydro-electric scheme were got ready.

For Periyar hydro-electric scheme specifications for the transformer yard, advance construction of Theni-Sembatti 110 KV line and additional equipments required for the sub-station were prepared. Specification drawings for the generating stations were completed. Details with regard to royalty to be paid to Travancore-Cochin State, net return, etc., in connexion with conference of the Ministers and Chief Engineers of both the States were prepared.

Blue prints for the data sheets for the generators, transformers and transmission lines of the Madras Grid were taken. All the details

required for the net work analyser study to be undertaken at the Indian Institute of Science at Bangalore were prepared and got ready.

Civil.—The following are some of the more important works attended to during the quarter :—

Under Madras plant extensions III stage work, specification for the construction of cooling tower was prepared.

Layouts for Coondapur, Hiriadka and Karkala sub-stations (under South Kanara extension scheme) were finalised and communicated to the field after approval. Revised designs for R.C.C. structures at Udipi and Coondapur were checked and general approval communicated.

Estimate for residential and non-residential buildings at Thudialur sub-station was sanctioned and specification for construction of combined control room office and stores were issued.

Under the Periyar hydro-electric scheme, the improved area of cross section and the maximum discharging capacity of the tunnel were finally decided as 150 square feet and 1,600 cusecs respectively. The general plan (with all details) in connection with forebay was revised and approved. Revised designs for camp buildings are being prepared.

Second revised Vaigai scheme details and consequent issue of allocation of revised cost of Vaigai dam between Electricity Department and the Public Works Department were studied.

For the " Seasonal power development at Mettur Dam " and " Pykara Dam power house " schemes, power graphs, duration curves, working tables and estimates for various alternatives were prepared.

Proposals for the posting staff and minimum budget provision required were worked. Rough estimates of civil works for Barapole and Hogenakal hydro electric schemes were prepared.

Two statements showing various water power sites with approximate location, etc., and showing details about sites developed were forwarded to Government.

Recording and compilation of rainfall and run off of various basins in this State, under observation of (*a*) the department and (*b*) those obtained from private owners and other departments, are being continued.

The construction work of measuring weir across Varapatlam Upper Bhavani was completed. The construction work of measuring weir across Punnapuzha and observation at Kundah and Avalanche were in progress.

CONNEMARA ... RARY
20 DEC 1956
MADRAS

Technical Press

New Battery Converts Sunlight into Electricity.

The first practical direct conversion of sunlight into electric power—perhaps potentially one of the most revolutionary scientific developments of recent years—was recently demonstrated before the U.S. National Academy of Sciences by engineers of the Bell Telephone Laboratories.

The engineers have succeeded in making a solar battery which theoretically should operate for many years and which produces an electric current sufficient to operate a radio transmitter and transmit voices or music by radio or over telephone wires.

It is possible, scientists say, that the battery opens the door to man's utilisation of the abundant energy of the sun which every day amounts to more than the energy content of all the reserves of coal, oil, natural gas and uranium in the earth's crust.

It is estimated that every hour the sun pours upon the earth the energy equivalent of 21,000 million tons of coal.

Even at this early stage, the sun battery may be of practical importance in the telephone industry at amplifier stations in rural telephone systems.

The Bell scientists report that they have achieved an efficiency of six per cent in converting sunlight directly into electricity with the new battery.

They pointed out that nothing is consumed or destroyed in the energy conversion process employed by the battery and that there are no moving parts.

Consequently, the sunlight battery "should theoretically last indefinitely," they observed.

The battery is simple in construction. It consists chiefly of strips of silicon, an abundant material which is a principal ingredient of common sand.

Each of the strips is about the size of a safety razor blade. The strips are wired together and are attached by wires to terminals.

The terminals, like those of any other battery, can be connected by wires to a radio, motor or other device operated by electricity.

Essentially, this means that when minute amounts of the correct impurities are introduced into chemically pure silicon, the impact of light at the point, the "p-n junction", where the impurities come together, creates electricity.

—"*The Sunday Standard*",

5th September 1954.

Commercial Atomic Power in 5 To 10 Years.

A top atomic official of General Electric, Francis K. McCune, has predicted that privately financed atomic power plants will successfully compete with conventional power plants in 5 to 10 years.

Speaking at the Atomic Industrial Forum in Washington, DC. May 24, McCune said :

We at General Electric believe that electric utility companies will be owning and operating a number of atomic power plants within the next ten years.

We believe some of these will be full-scale and, what is most important, they will generate electricity at competitive costs possibly within five, certainly within ten years.

"Of course, the government's large expenditures for research and development of plutonium production reactors, mobile power reactors, and power reactors form the base from which private industry can proceed," he went on to say.

He further stressed that G. E. studies show that production size atomic power plants can be made to operate economically.

Reactors best suited for " earliest and most effect competition with conventional fuel plants " were described by McCune as : (1) light-water-moderated and cooled boiling reactor ; and (2) graphite moderated water cooled reactor.

The first type, he explained, would eliminate the need for a boiler system, because water would be boiled inside the reactor to produce radioactive steam that would power a turbine.

The reason that the boiling reactor was chosen by G. E. experts in part, he told Forum members, is its similarity in many ways to conventional steam plants.

"Its adoption by the electric utility industry should be relatively easy. The moderator and coolant are both ordinary water which the industry is used to handling. Chemical separation plants are not necessary. The boiling reactor has safety features that have been demonstrated so that operating companies should be able to choose plant sites as available within their systems," McCune said.

" The light-water reactor, " he went on to explain, " is one which can become competitive in the higher fuel-cost areas of the country in the near future."

This reactor, according to G.E. studies, could produce electricity for 6·7 mills per kilowatt-hour, compared to a cost of 6·9 mills for a conventional coal burning plant. Plants chosen for comparison would each deliver 300,000 net kw of electricity.

The cost figures described were derived " on the basis of coal at 35 per million but's a price paid in a number of sections of this country."

McCune reported, " The fixed charges are higher on the atomic plant. It is estimated that operating costs are slightly more. The

big difference is in the relatively low fuel cost, 1.35 mills per kilowatt-hour for long-burn-up fuel."

Cost of electricity from the graphite-moderated reactor, the G.E. official said, would come to 6·8 mills per kilowatt-hour.

Size of the graphite reactor chosen for the cost estimate was described as quite large, with a net electrical capability of 700,000 kw. The large size is designed to achieve economy of operation.

"The graphite reactor is not necessarily limited to such large sizes," he commented. "It is possible that it might be cooled by boiling water which would make it economic in smaller sizes."

—"*General Electric Review*", July 1954.

Care and Use of Rope and Blocks.

Day in, and day out, we depend on the use of rope and blocks to do most of our "heavy hauling". It seems quite natural for us, therefore, to take them more or less for granted. Safe operation, however, demands that we take proper precautions in the care and use of this equipment.

1. When removing rope from a coil, make sure that it unwinds in a counter-clockwise direction. In order to do this, lay the coil flat on the floor with the inside end of the rope at the bottom. Always take the rope from the counter of the coil.

2. After use, lay the rope down in a clockwise direction. This prevents twists and kinks.

3. Store rope in a dry place where free circulation of air is provided.

4. Never store wet rope. Always dry the rope properly after wetting. This will avoid premature loss of life and strength.

5. Keep rope free from oil, mud, sand, and grit.

6. Keep rope away from acids or surfaces upon which acid may have spilled.

7. Do not use frozen rope.

8. Avoid kink in rope. Never pull kinks through a block. This will shear the fibres and weaken the rope.

9. When moving from one location to another, do not allow rope to drag on the ground or over sharp objects.

10. Avoid sudden jerks in raising or lowering a load.

11. Do not tie or snub rope to objects of relatively small diameter if this rope is to be placed under tension.

12. Never straddle or stand close to rope under tension.

—"*The Line*", May–June 1954.

TVA Installing Largest Pump-Turbine

The largest pump-turbine built or designed to date is currently being installed at Hiwassee dam on the Tennessee Valley Authority System. This machine will rotate in one direction as a pump and in the opposite direction as a turbine.

A single hydraulic machine capable of operating at high efficiency as both a turbine and pump is a recent development

Major feature.—Nominal rating of the unit operating as a turbine is 80,000 horse-power at 190 feet head. For operation as a pump, the reversible unit is rated at 3,900 c.f.s. against a head of 205 feet. At this head, the pump will require a motor output of 102,000 horsepower and have a specific speed of 2,560 on a gpm basis.

As a generator it will be rated 70,000 kva. 60°C rise. Both motor and generator efficiency at these ratings are expected to be more than 97 per cent.

—"*Electrical World,*"
5th July 1954.

Social And Personal

SRI P. A. Krishnan, Superintending Engineer, was reverted as Divisional Electrical Engineer with effect from 25th June 1954 afternoon and went on leave. He was compulsorily recalled from leave and appointed as Superintending Engineer, Technical (Electrical), under emergency rules with effect from 9th August 1954 forenoon.

On return from leave, Sri K. M. Kuruvilla was posted as Superintendding Engineer, General Construction Circle, with effect from 1st October 1954 *vice* Sri P. M. Chengappa.

Sri P. M. Chengappa was granted leave on average pay for four months from 24th September 1954 forenoon preparatory to retirement.

Sri R. Mc. G. Morren, Assistant Generation Superintendent, Madras Electricity System, proceeded on leave for thirty days from 8th October 1954.

Promotion.

Sri G. A. Viswanathan and Sri A. M. Ramalingam, Assistant Engineers (Electrical) were promoted as Divisional Electrical Engineers on probation.